0 601 933 703
Stand } ~~99-08~~
Issue } 02-06-18

Fig./Abb. 1

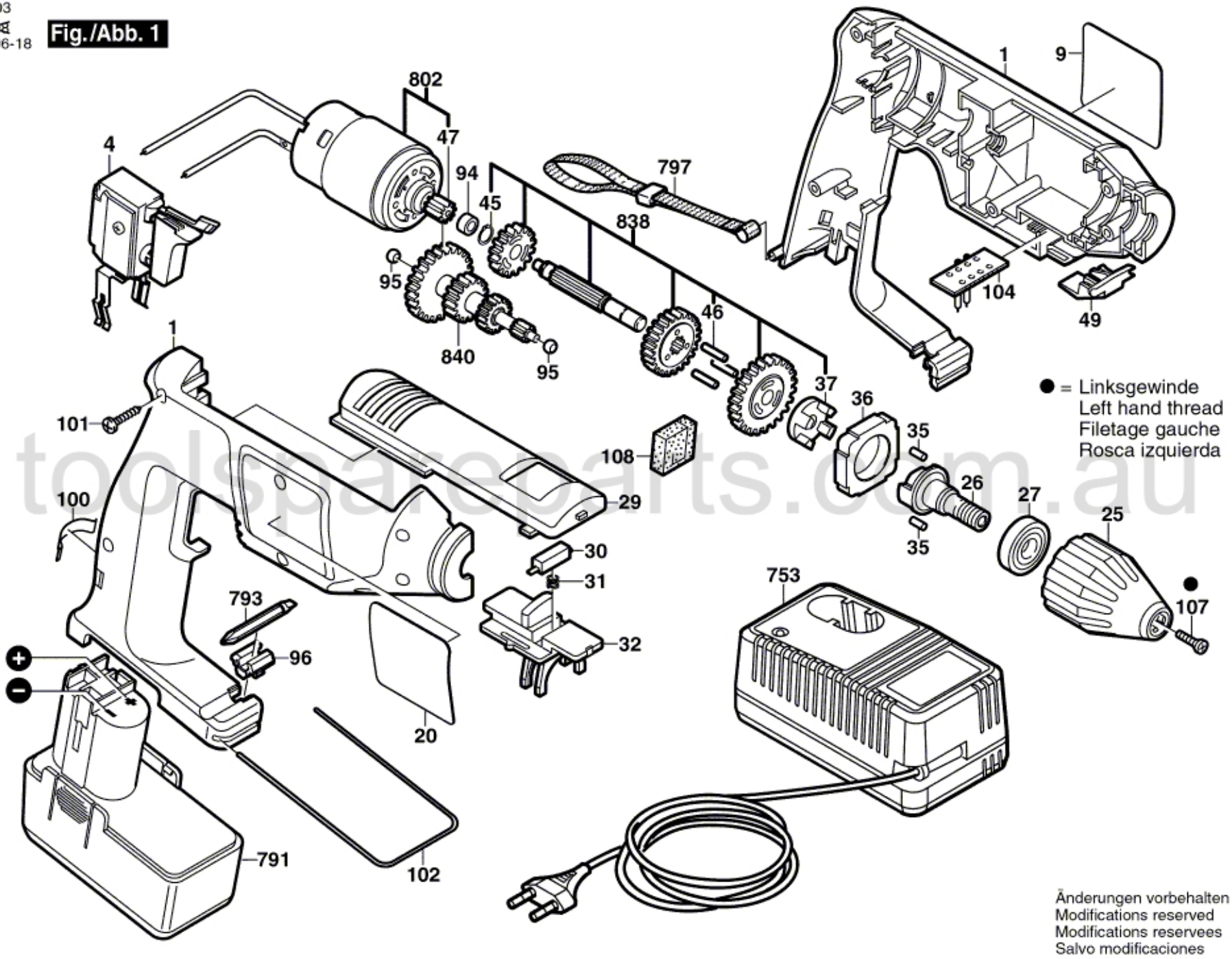

toolspareparts.com.au

Änderungen vorbehalten
Modifications reserved
Modifications reservees
Salvo modificaciones